Quick Start Guide
PPT200BT

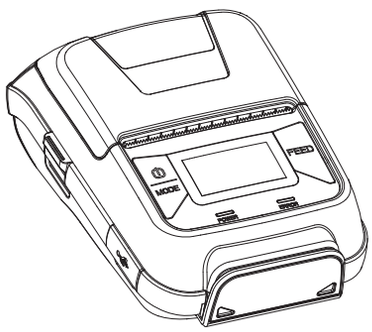

Packing List

Printer

USB Cable

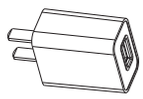
AC Adapter

Battery Pack

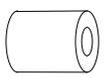
Roll Paper

Belt Clip

Quick Start Guide

CD

Note:
1) The packing materials are actually dependent on the order.
2) The AC adapter vary by local or region.

Appearance and Components

- **Front**

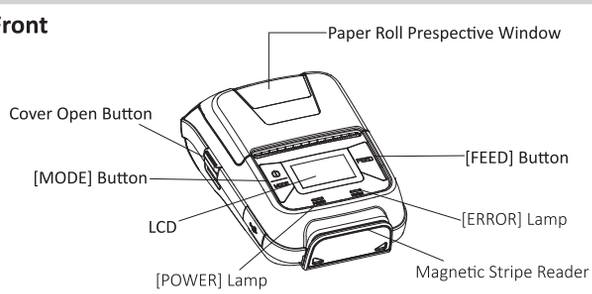

- **Rear**

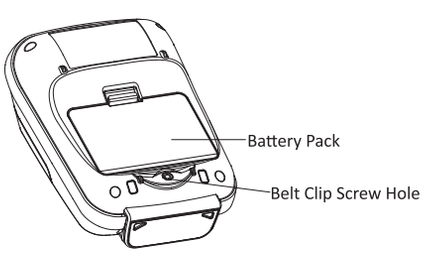

- **Inside**

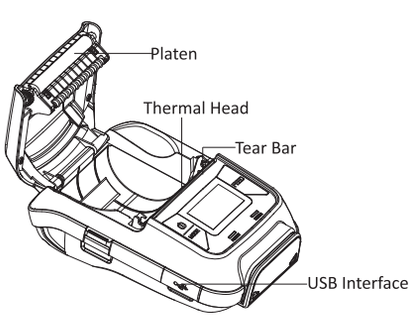

Paper Loading

1.Press the cover open button to open the paper cover.

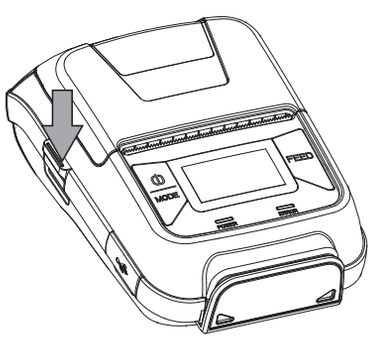

2.Load the roll paper in the orientation shown in the figure below.

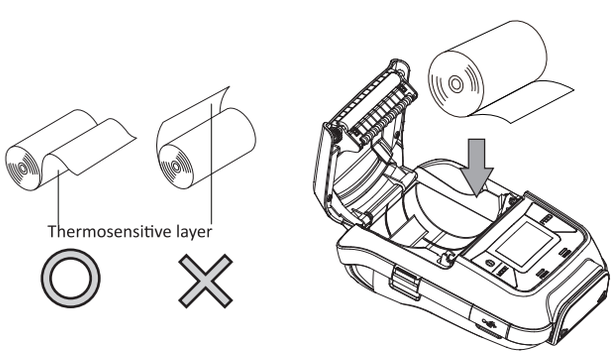

3.Pull the end of the roll straight toward you. Then press down on both sides of the printer cover to close it firmly. When you close the printer cover,make sure that it is closed on both sides.

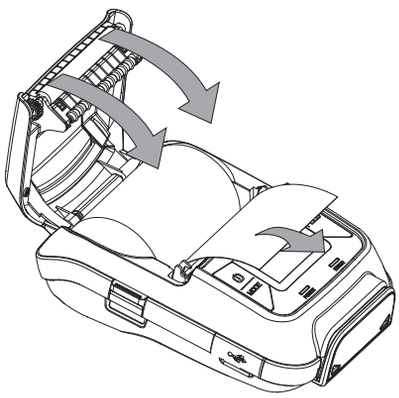

4.Use the tear bar to cut the extra paper.

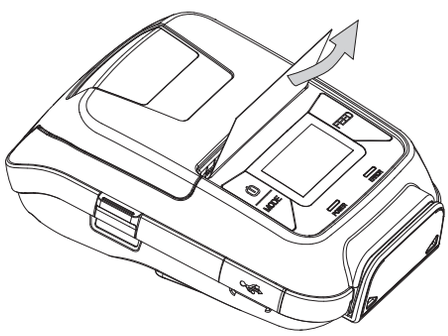

Battery Installation

1.Make sure that the printer has been turned off before you insert or remove the battery pack.

2.Insert the battery pack into the back of the printer as in the figure shown below, following the direction of the arrow. Press down on the battery pack until the hooks click into place.

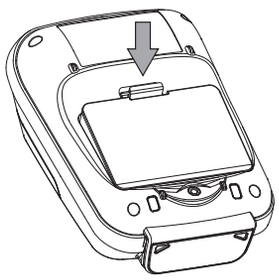

3.To remove the battery back, pull back the hook, and use the opposite procedure from the one you used to insert the battery pack.

Battery Charging

Plug in socket with USB charging.

When battery pack runs out of power, the battery icon will flash. It powers off automatically when continues printing.

If you want to go on, please charge it.

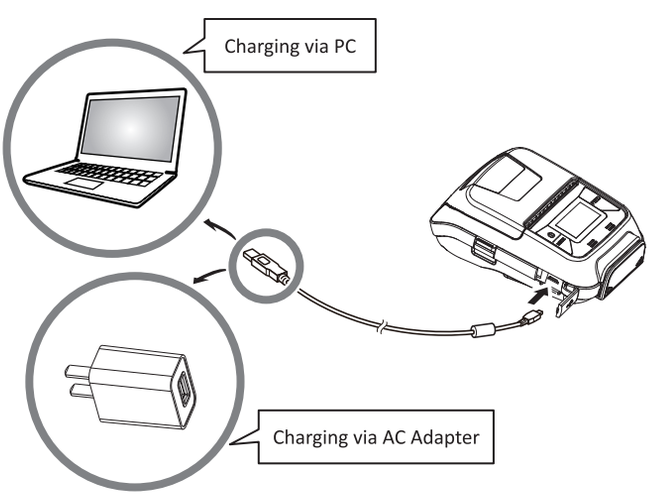

⚠ NOTE

◆POWER lamp will always flash in green color and goes off when fully charged.

◆Charging the printer when it is on, even if battery icon on the LCD shows fully charged, turn off the printer and let the battery charge until the POWER lamp goes off for fully charge.

Menu Settings

1.Press and hold [MODE] button for approx. 2 seconds, and printer is turned on LCD display is shown as follows.

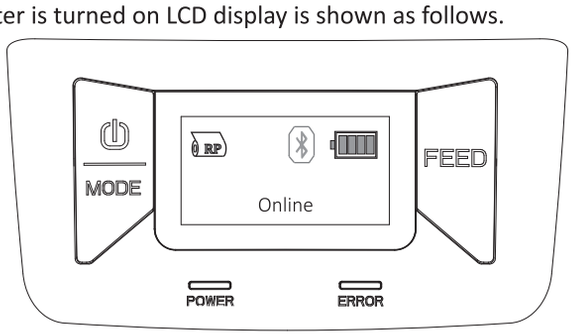

2.Press the [MODE] button and the [FEED] button, release the button to enter the main menu after the screen display "enter the setup mode" .

3.Press the [MODE] button to swtich options, or return to the previous menu.

4.Press the [FEED] button to move the cursor, or confirm the current setting.

⚠ NOTE

◆Before changing the menu settings, make sure that the communication with a host device is disconnected.

◆When the printer is under the Bluetooth communication with a host device, it cannot enter the Menu Setting mode.